Theoretic Mass(kg)		Revision	
Surface Area(dm2)		A4	

Thread	Hole	Shaft

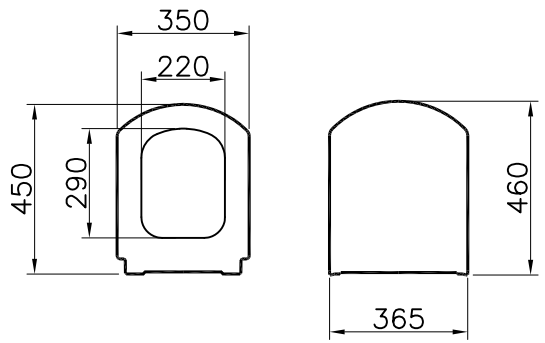

item	Quantity	Part Name	Drawing No	Material	Material Class
1	1	Toilet Seat	95-XXX	DUROPLAST	

This drawing can only be used for the intended purposes. Unauthorized copying is strictly prohibited.

Series	Material		Material Class
SHIFT	Toilet Seat	DUROPLAST	

Drawn By	Controlled By	Approved By	Date	Drawing No	Scale
G.GULTER	A.EROGLU	S.VEDAT SARIGOL	12.12.2013	95-XXX	1/20

VitrA® | ARTEMA®

R.S	Description	Date	NAME